meusburger

INFRARED TEMPERATURE MEASURING DEVICE — MTM 1100

PRODUCT DESCRIPTION

- Fast, non-contact measurement
- Laser measurement spot marker
- Display of min./max. values
- External temperature probe MTM 5010 can be connected to T2 and T4
- Optimal for plastic parts
- Visual and acoustic alarm in case of limit violations

SCOPE OF DELIVERY

- Certificate of calibration and a battery (9V block)
- Calibration protocol

Optics	Weight	Emission level	External temperature probe	Measurement spot marker	Error limit	Scaling	MB[1)]	No.	#CU#
10 : 1	200 g	0,1 - 1	nein	1 Punkt	± 2 °C	0,1 °C	**-30 - +400°C**	MTM 1100/830-T1	XX,YY
12 : 1	200 g	0,1 - 1	ja	2 Punkt	± 2 °C	0,1 °C	**-30 - +400°C**	MTM 1100/830-T2	XX,YY
30 : 1	200 g	0,1 - 1	ja	2 Punkt	± 1 °C	0,1 °C	**-30 - +400°C**	MTM 1100/830-T4	XX,YY

1) MB: measuring range

OPTICS

10:1 standard optics,
1 laser beam as measurement spot marker

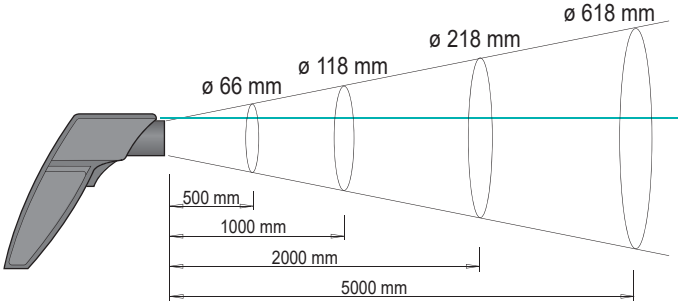

Precise 12:1 optics for exact measuring over large distances,
2 laser beams as measurement spot markers

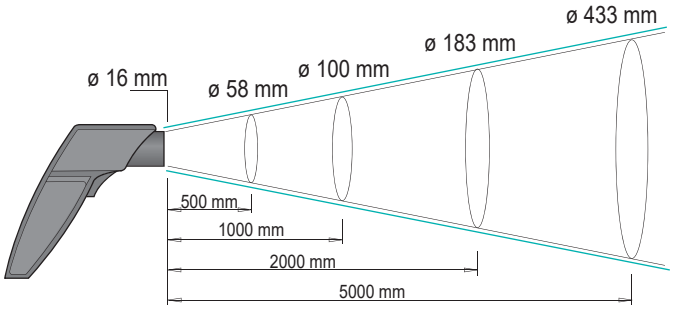

Distance to measurement spot 30:1,
2 laser beams as measurement spot markers

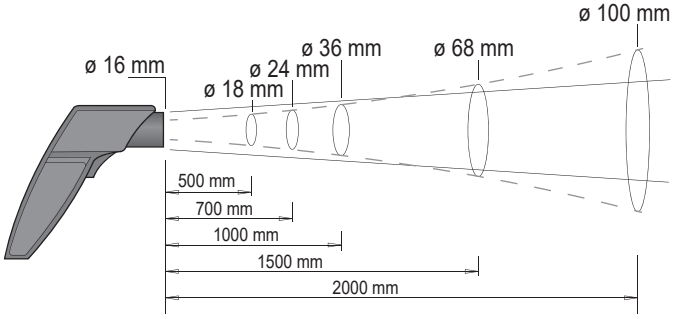

Meusburger Georg GmbH & Co KG | Kesselstr. 42 | 6960 Wolfurt | Austria
T +43 5574 6706-0 | sales@meusburger.com | www.meusburger.com